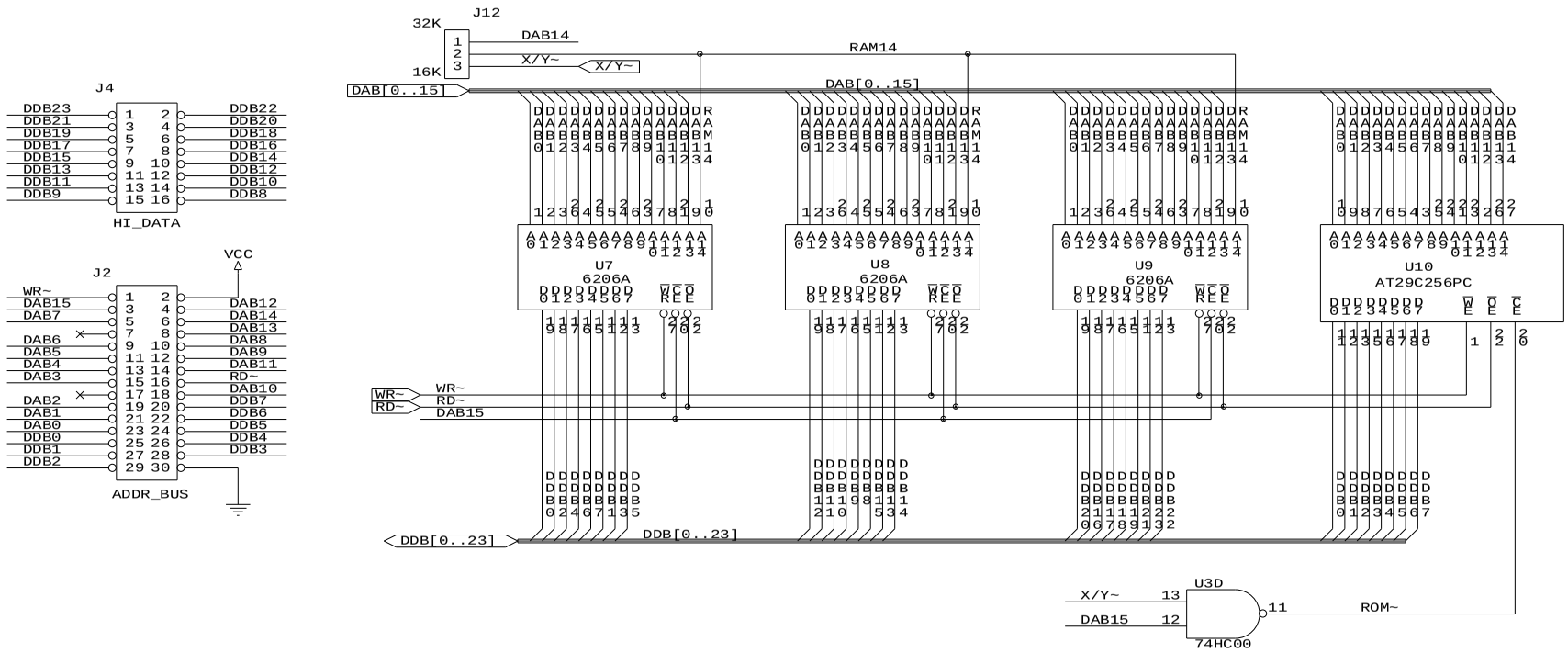

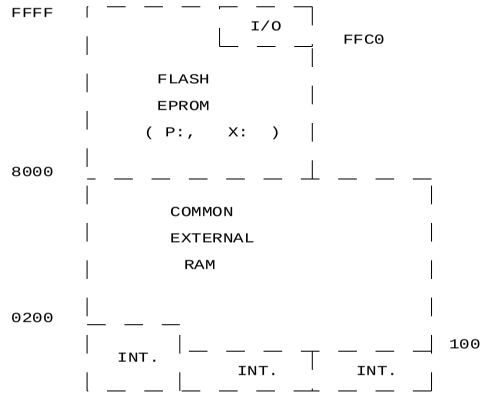

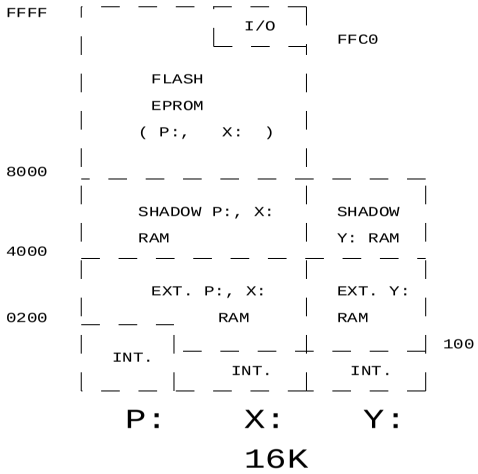

MOTOROLA DSP APPLICATIONS 6501 Wm. Cannon Dr. West Austin, Texas 78735		
Title DSP56002 EVM - MEMORY		
Size B	Document Number 56K2EVM	REV 2.2
Date: December 12, 1996	Sheet 3 of 6	